IT070Y240Z

Bulb Type		LED
Operational Frequency		50 Hz
Operational Voltage		48-240V AC/DC
Product		LED Horn 70mm
Color		Yellow
Insulation Voltage	**Ui**	300V
Operating Temperature		-25 °C /+70 °C
Protection Degree		IP65
Cable Section		Cable 0,50 mm2
Production Time		31.12.1899 00:00:00
Serial		IT Series
Buzzer		With Buzzer
Electrical Life	**Min Hour**	20000
Specifications	Heat resistant, clear vision Polycarbonate signal module	
	Monoblock construction	
	Easy wiring	

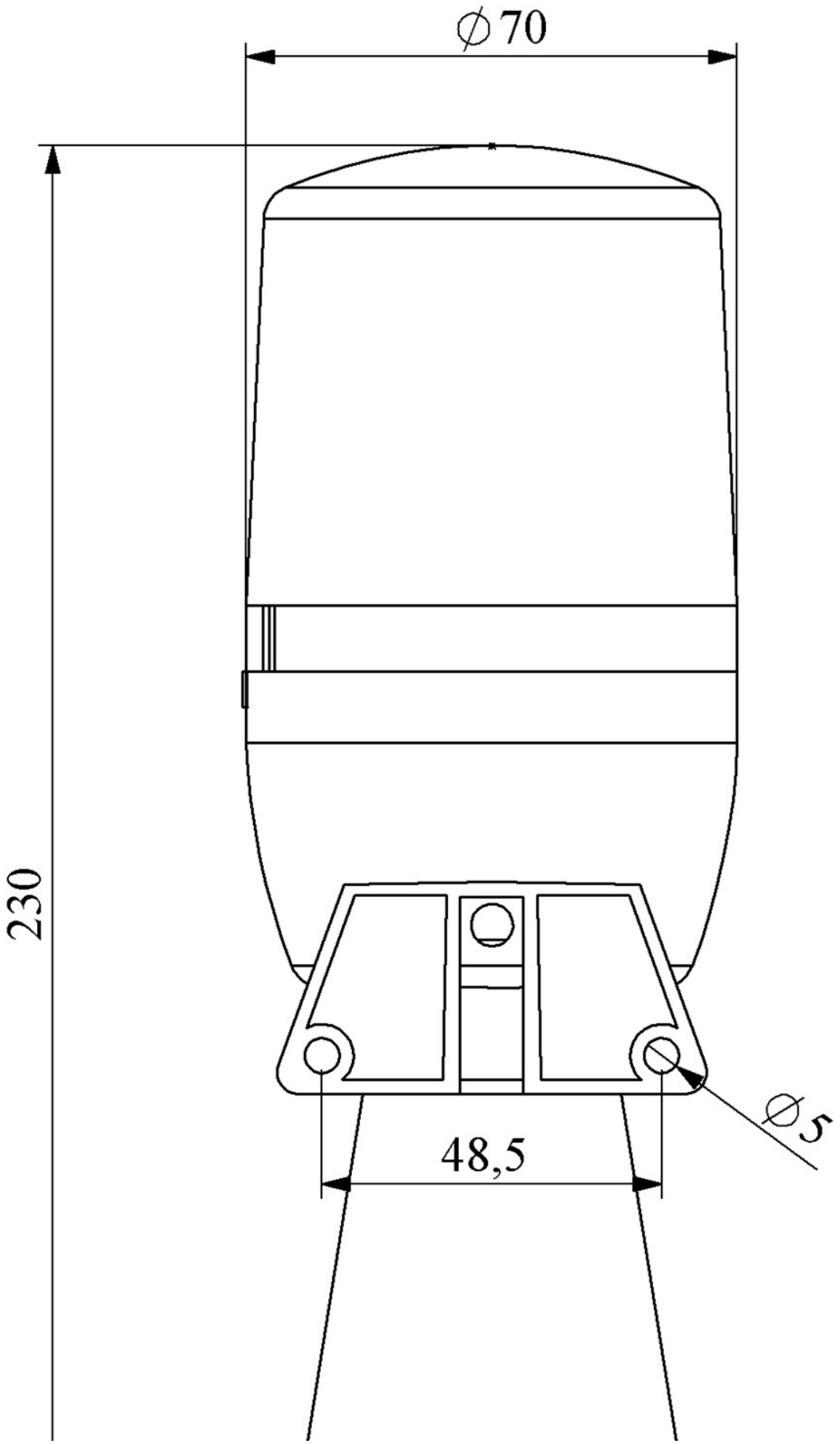
∅70
230
48,5
∅5

Spire.XLS

Free version is limited to 5 sheets per workbook and 200 rows per sheet. This limition is enforced during reading or writing XLS or PDF files. When converting Excel files to PDF files, you can only get the first 3 pages of PDF file.

Upgrade to Commercial Edition of Spire.XLS